Carrier Transport A/C

Gen V EM-2

Low - Profile
DESIGN
makes it
your best
CHOICE
overall.

Carrier

Gen V EM-2. The Ceiling-mount unit that's *top-rated* for performance.

Our Gen. V EM-2 ceiling - mount air conditioning evaporator has been engineered for maximum serviceability and ease of installation in light - and medium - duty buses and vans. Because the drain pan is part of the basic system, the EM-2 can be completely installed, charged and tested before the cover is put in place, greatly reducing installation time. Simple cover removal provides ready access to all serviceable components. Rear-mount, side-mount, or forward-mount (for the driver's area) evaporators are available for non-ducted applications.

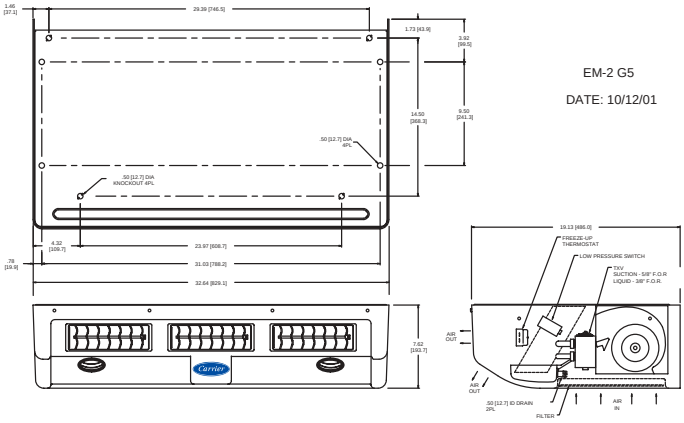

SPECIFICATIONS

Standard Features Include:

- New, efficient, Transverse Blower Technology reduces AMP draw and provides increased uniformly distributed airflow.
- Higher capacity unit in a smaller package (height reduced to over 20% less than existing models, thereby significantly increasing head clearance)
- Heavy-duty galvanized steel frame is reinforced for added strength.
- High volume air throw, widely dispersed through bi-directional louvers for total passenger comfort.
- State-of-the-art enhanced tube & fin coils for maximum cooling capacity.
- Variable speed blower allows for full air flow adjustment to optimize system to individual cooling preferences.
- Reduced service time with single, easily accessible motor, bottom mounted air filter, fewer parts & fasteners.

Specifications:

Cooling Capacity
43,000 BTU/HR - IMACA
18,500 BTU/HR - ARI

Refrigerant
R-134A

Dimensions:
Length 33.95"
Width 19.13"
Height 7.62"

Weight
49 lbs.

©2001 Carrier Transicold
A member of the United Technologies Corporation Family
Stock Symbol UTX.

Printed in USA 0601
Form 210-031

Specifications are subject to change without notice.
www.transportaircon.carrier.com

Carrier Refrigeration Operations
Carrier Transport Air Conditioning
715 Willow Springs Lane
York, PA 17402
717-767-6531
800-673-2431
Fax: 717-764-0401